Lock&Lock | Tri-proof Light

20W/40W/60W

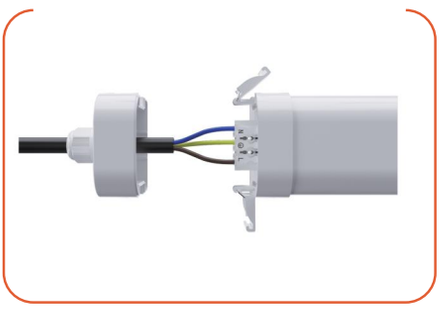

In order to help our customer to lower labor cost during installation, our Lock&Lock series tri-proof light's end-cap is designed specially. With screw-free lock buckles on each end, it can be open very easily so that customers can rewire into the terminal inside the housing. And 3XL, 3x1.5mm2, 3x2.5mm2, 5x1.5mm2 and 5x2.5mm2 wire through are all for option to be linkable in series.

STANDARDS/CERTIFICATES

- IEC 60598-1
- IEC 60598-2-1
- EN IEC 55015
- EN IEC 61547
- EN IEC 61000-3-2
- EN 61000-3-3
- EN 62493
- IEC TR 62778
- EN IEC 62031

SILVAIR

Bluetooth

CASAMBI

Product data

General Information

Light source engine type	LED
Driver included	Tridonic
Lifetime	L70B10 >102000hr Light maintenance assessments to TM-21 based on LM-80 data.
Warranty	5 years

Operating and Electrical

Input Voltage / Frequency	220-240V, 50~60Hz
Electrical class	Class I
Power factor (at full load)	>0.95
Surge Protection	Luminaire surge protection level until 1 kV differential mode and 2 kV common mode

Controls and Dimming

Function	DALI （for option) CCT adjustable: 3000-4000-5000K (for option)
Wire through	3x1.5mm2 wire through (default) 5x1.5mm2 wire through (for option) 3x2.5mm2 wire through (for option) 5x2.5mm2wire through (for option)
Device	NA
Cables	NA

Maintenance and Assembly

Installation methods	Suspension, Surface mounting
Accessories	Stainless steel buckle, wire connector

Light Technical

Luminous Efficacy (rated) (Nom)	170lm/w
Wattage	20W/40W/60W
Luminous Flux	3400/6800/10200LM
Upward light output ratio (ULR)	Between 0.00% and 0.35%
General ingress protection	Luminaire: IP65 (EN IEC 60598-1)
Protection against impacts	IK08 (IEC 62262)
Color rendering index (CRI)	>80
LED colour temperature	3000K/4000K/5000K/6000K/6500K
Optical cover type	Symmetric
Photometric distributions	120°
Total harmonic distortion	<15% （220Vac/50Hz, Full load, 25℃）
McAdam ellipse	≤5
Ambient temperature range	-20~+45℃

Mechanical and Housing

Housing Material	PC+AL6063
Optic material	PC
Housing Color	Milky white

Accessory

Stainless steel buckle wire connector

DIP Switch CCT Adjustable

Light distribution angle

Optical options: **120°**

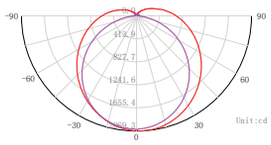

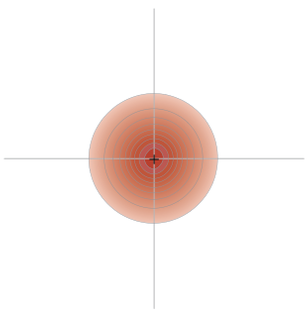

Package

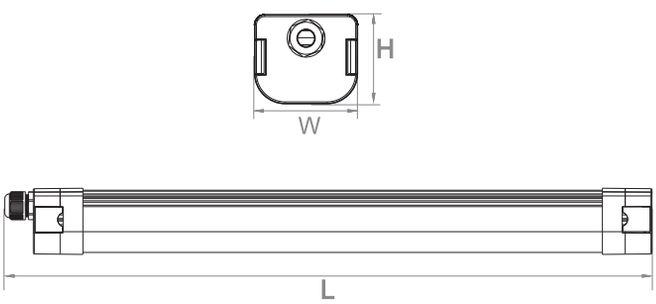

Model	Dimension(mm) L	W	H	Outer Carton(mm) L	W	H	QTY/ CTN	NW(kg)	GW(kg)
TP020LE2J-BR	659	74	64	735	260	155	6	3.50	4.50
TP040LE4J-BR	1221	74	64	1295	260	155	6	9.00	10.50
TP060LE5J-BR	1502	74	64	1575	260	155	6	9.50	10.50

Container	Model	QTY/Container
20GP	20W	3960PCS
20GP	40W	2040PCS
20GP	60W	1680PCS

Container	Model	QTY/Container
40GP	20W	8328PCS
40GP	40W	4476PCS
40GP	60W	3480PCS

Application